DRAWING No.: M504-88 X 5042	IF IN DOUBT - ASK	©	NOT TO SCALE	THIRD ANGLE PROJECTION	ALL DIMENSIONS IN mm

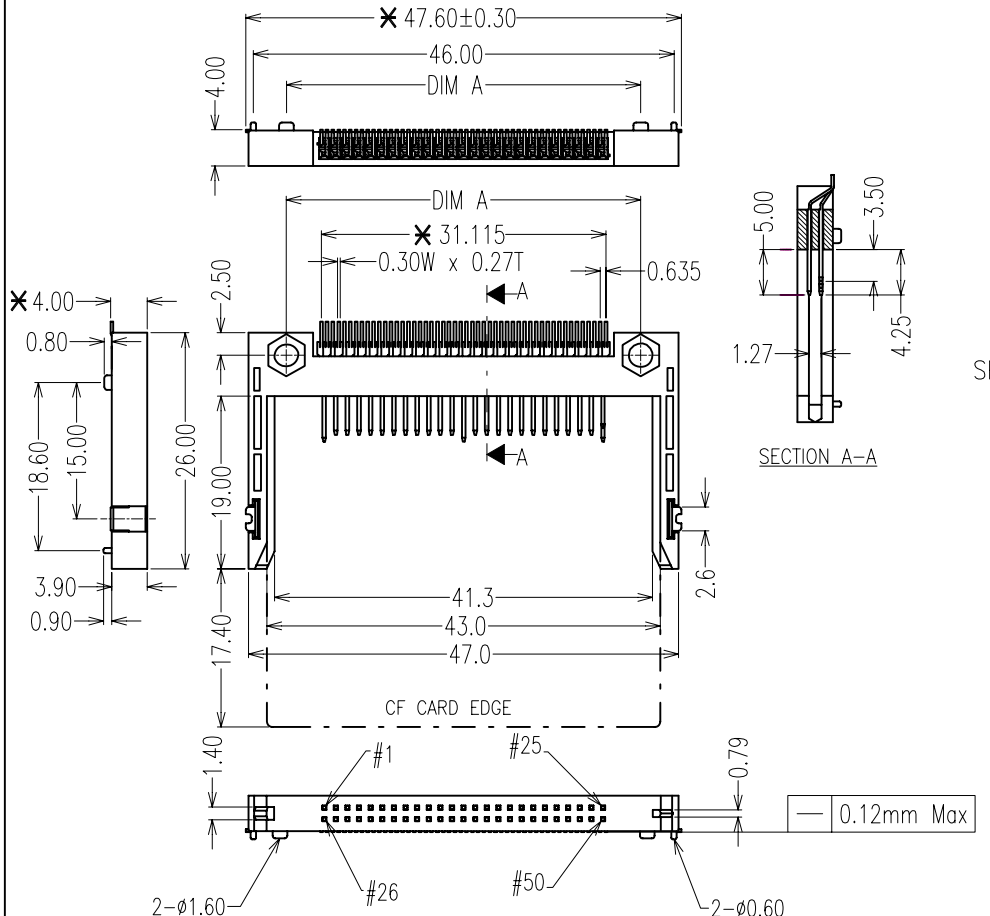

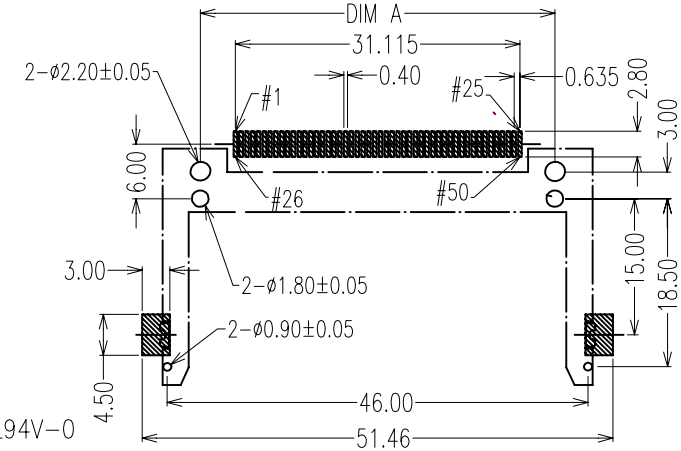

SPECIFICATIONS:
- MATERIAL:-
  - HOUSING: THERMOPLASTIC, UL94V-0
  - TERMINAL: COPPER ALLOY
  - PED: BRASS
- FINISH:-
  - TERMINAL: SELECTIVE GOLD OVER Ni UNDERPLATE
  - SOLDER TAIL: Sn OVER Ni
  - PED: 100u" Sn OVER Ni
- ELECTRICAL:-
  - CURRENT RATING: 1 AMP. MAX
  - DIELECTRIC WITHSTANDING VOLTAGE: 1000V AC RMS FOR 60 SECS
  - CONTACT RESISTANCE: 100 mΩ MAX.
  - INSULATION RESISTANCE: 1000 MΩ MIN. AT 500V DC
- MECHANICAL:-
  - DURABILITY: 10 000 CYCLES
- ENVIRONMENTAL:-
  - TEMPERATURE RANGE: -40°C ~ +85°C

NAME	ISS.	DATE	C/NOTE
Allan	1	01.08.06	-

APPROVED:
CHECKED:
DRAWN: Allan
CUSTOMER REF.:
ASSEMBLY DRG:

TABLE

Pin Type	interface dim	Pin No.
Detect	3.5 mm (0.138 in)	25, 26
General	4.25 mm (0.167 in)	The Others
Power	5.0 mm (0.197 in)	01, 13, 38, 50

TOLERANCES
X.X = ±0.30mm
X.XX = ±0.20mm
X.XXX = ±0.10mm

NOTES: ALL DIMENSIONS AND NOTES MARKED ✱ ARE CRITICAL AND MUST BE CHECKED IN ACCORDANCE WITH QUALITY DOC. Q1-02A

ORDER CODE
M504-88 X 5042
- 1: DIM A=38.74mm
- 2: DIM A=40.16mm

HARWIN

HARWIN USA
TEL: 603 893 5376
FAX: 603 893 5396
mis@harwin.com

HARWIN Europe (UK)
TEL: 023 9231 4545
FAX: 023 9231 4590
mis@harwin.co.uk

HARWIN Asia
TEL: +65 6 779 4909
FAX: +65 6 779 3868
mis@harwin.com.sg

THIS DRAWING AND ANY INFORMATION OR DESCRIPTIVE MATTER SET OUT HEREON ARE CONFIDENTIAL AND COPYRIGHT PROPERTY OF THE HARWIN GROUP AND MUST NOT BE DISCLOSED, LOANED, COPIED OR USED FOR MANUFACTURING, TENDERING OR FOR ANY OTHER PURPOSE WITHOUT THEIR WRITTEN PERMISSION.

TOLERANCES
X. = ±1mm
X.X = ±0.25mm
X.XX = ±0.10mm
X.XXX = ±0.01mm
ANGLES = ±5°
UNLESS STATED

MATERIAL: SEE NOTES
FINISH: SEE NOTES
S/AREA: mm²

TITLE:
CF CARD CONNECTOR, 1.27mm PITCH
PCB SURFACE MOUNT, 50P, SLIM NORMAL TYPE

DRAWING NUMBER: M504-88 X 5042

SHT 1 OF 1